Serviceable Series

Pneumatically, Electrically, and Manually Actuated Ball Valves

Designed for easy, ongoing service and low long-term maintenance costs

Highlights

Ease of Serviceablity Three-Piece Valve Design

Valve Wear Components Can Be Quickly & Cost-Effectively Replaced Enabling Valve to Remain in Service Throughout it's Intended Life

Compact, Durable, Long-Life Pneumatic & Electric Actuation

Valve & Actuators Include Industry Exclusive Features

Female NPT Screwed End, Socket Weld, Tube Socket Weld

Value-Engineered Automated Ball Valve Solutions

Designed, Manufactured, Assembled, Tested, Supplied, and Supported
from our Raymond, NH USA Headquarters

Rev. 10/2020

Table of Contents

Serviceable Series SL03-2010

Product Information

1. Ball Valves
2. Pneumatic Actuators and Accessories
3. Electric Actuators

Product Specifications

4. Ball Valves
5. Pneumatic Actuators and Integral NAMUR Solenoid Valves
6. Pneumatic Actuator Accessory - Limit Switch
7. Electric Actuators

Product Dimensions

8. Pneumatically Actuated Ball Valves
9. Electrically Actuated Ball Valves
10. How To Configure Model Number - Manually & Pneumatically Actuated
11. How To Configure Model Number - Electrically Actuated
12. Sample Request

2 Otter Court, Raymond, NH 03077 USA
T 603 244-7931 F 603 895-6785 E service@geminivalve.com
www.geminivalve.com

Product Information

Ball Valves

Gemini's Serviceable Series Ball Valves are ideal for those applications where ease of serviceability and low long term cost to maintain is desirable. After the initial purchase of the ball valve wear components such as seals, balls and stems can be replaced quickly and cost effectively essentially enabling the valve to remain in service throughout it's intended life.

In addition to the traditional features offered with three piece construction Gemini's unique two piece pipe adapters allow the flanges to rotate independently of the pipe connectors. This combined with a mating counterbore on the pipe flanges allows quick accurate alignment to the valve center section. The assembly bolts screw directly into the assembly flanges. There are no assembly nuts to be dropped or lost when installing or servicing the valve.

Offered in 1/4" - 2" NPT female screwed end, socket weld, tube socket weld, and others upon request. Valve body, ball and stem materials are stainless steel which provide excellent durability and corrosion resistance. Seals are Reinforced P.T.F.E. (Teflon®), Body Seals Viton®. Optional Seals available. Available with manual stainless steel lever style handle or with Pneumatic & Electric Actuators.

All valves feature a self wear compensating stem seal design which ensures long, leak-tight, maintenance free service. This unique design is also temperature compensating ideal for medias the fluctuate rapidly such as steam or Co2.

Gemini Serviceable Series ball valves featured machined seats and seals. The provides an optimum sealing surface ideal which enables a excellent vacuum rating of 20 microns. If you have further questions regarding how are valves will preform in vacuum applications or any other application please reach out to us to consult with one of our valve specialists.

OEMs with a special need? Contact us with the details and if we're a good fit we can design, prototype and manufacture a custom solution to best meet your application needs..

Features / Advantages

All Stainless Steel Construction
Durable and Long Lasting

Assembly Bolts Screw Directly Into Flanges
No Nuts or Washers to Drop or Lose When Servicing

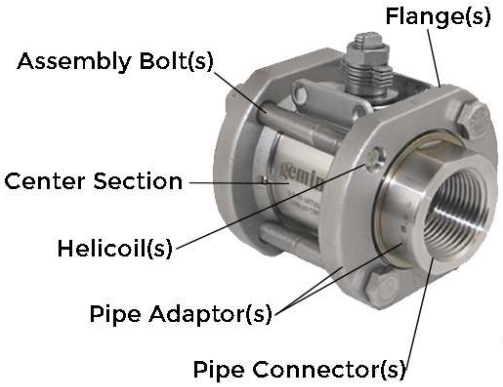

Helicoil Locking Inserts
Secures Assembly Bolts

Flange Design Enables Easy Removal of Center Section
Flanges Slide Over Pipe Connectors Providing Clearance for Center Section Removal

Variety of Connections
Pipe: Female NPT, Socket Weld
Tube: Tube Socket Weld

Unique Two-Piece Pipe Adaptors
Flanges Rotate Independently of Pipe Connectors Combined with Mating Counterbore Allows Quick, Accurate Alignment to Valve Center Section

Product Information

Pneumatic Actuators & Accessories

Gemini's Pneumatic Actuators represents the combination of the latest in machining technology and our more than thirty five years experience in producing high performance pneumatic actuators.

Double-Acting

Spring-Return

Two pneumatic styles are offered: Double-acting, which uses air to move pistons in both directions and spring-return, which uses air to move pistons in one direction and springs in the other. Double-acting is the most popular since it offers a compact size and longest service life at the lowest cost.

Pneumatic actuators feature a special rack and pinion design made possible though our unique manufacturing techniques. The results; a compact ball valve actuator which is efficient and trouble free. Index (or Cycle) time is approximately 1/2 to 1 second depending on model. Deigned to operate using an air supply of 60 - 125 psi. The air can be delivered by direct mounting pilot valves such as the Gemini model GP having NAMUR interfaces or from remote pilot valves connected via means of 1/8" NPT female threaded orifices in the actuator face plates.

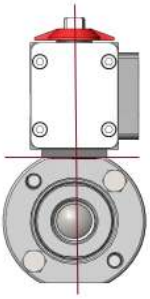

The mounting system precisely couples the actuator drive shaft to the stem. Additionally the valve stem nut is fixed within the actuator shaft. These features combined with a rigid mounting bracket, results in a pneumatically actuated ball valve which minimizes backlash, assures optimum stem seal life and prevents any possibility of stem nut back off.

Geminis' Industrial GP Series Solenoid Valves utilizes a flush mount NAMUR compatible interface to provide a space efficient design which quickly and easily mounts to Geminis' Industrial Series Pneumatic Actuators.

Constructed from corrosion resistant materials including a Teflon impregnated, hard coat anodized aluminum body, stainless steel spool and Zytel operator body to ensure long, trouble free life in a variety of environments. A single air connection and DIN style electrical connection are all that is required to complete the automated ball valve package. The Mini-DIN style operating coil is available in a variety of popular voltages and can be adapted to conduit, strain relief, wire lead or automotive style connections.

Limit switches are available for all models to remotely denote valve position or to connect with other devices. Special brackets and shaft extensions available for mounting the Geminis' Limit Switch, auxiliary equipment including positioners and signal transmitters, requiring NAMUR interface compatibility.

The limit switch utilizes two mechanical S.P.D.T. (Single-Pole, Double-Throw) microswitches which respond to actuators' fully open or fully closed position by mean of a cam fitted to the actuator top shaft. U.L.® Listed as Industrial Control Equipment for use in Hazardous Locations, Class I, Groups B, C, & D and Class II, Groups E, F, & G

Product Information

Electric Actuators

Gemini's Electric Actuators have been designed for durability and longevity. Ideal for automation where no air supply is available for a pneumatically actuated valve, or if slower index time is needed. Example; high velocity / pressure, actuation can minimize or prevent 'water hammer,' which occurs if a valve closes quickly at the end of a pipeline system.

Actuators use voltage to power valve on / off. Once actuator reaches full open / close position, internal cam switches turn off motor. Wiring terminal block enables position feedback with motor voltage. An optional set of limit switches are available to connect to voltages other than motor (voltage) for position feedback or to power other devices. Available in 120VAC, 12 & 24VDC. Index (or Cycle) time is approximately 6 seconds. UL®508 Listed (AC Models Only).

The cast aluminum base dissipates internal heat though a special thermal conductor that pulls heat from the motor and allows for cooler operation during high duty cycle operation.

The permanently lubricated drive train and brushless motor is housed within a Viton® sealed enclosure rated to NEMA 4X to protect against moisture and contamination. As a final measure of electrical protection all AC motors utilize auto-resetting thermal overload circuits. Teflon® coated cast aluminum base, Dupont® FR50 Cover and Stainless Steel Trim for Maximum Corrosion Resistance.

The actuator features a simple push-button operated override with exclusive fold-out lever handle. The push-button manual override system allows the user to easily disengage the electric drive gear train for manual operation of the actuator. All external power must be off prior to using the manual override feature. The actuator manual override handle can be used in the closed or open (lever extended) position to provide additional leverage.

To open the handle, pinch the Lever Release Buttons and pull up.

Lever Release Buttons

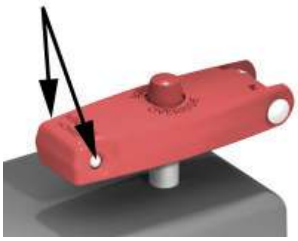

Press down the manual override button (atop the center) and turn the handle to manually open or close the actuated valve assembly.

Manual Override Button

To reengage the drive train, release the override button and turn the handle until the manual override button 'clicks' signaling the re-engagement of the drive train. The manual override lever handle can then be closed.

Product Specifications

Ball Valves

TEMPERATURE*: -20˚F to 400˚F

PRESSURE*: 1,000 P.S.I**. C.W.P.***

VACUUM: 20 Micron

SATURATED STEAM: 150 p.s.i.

*also see Pressure Temperature Chart
** C.W.P. = Cold Working Pressure to 150˚F
*** p.s.i = Pounds Per Square Inch

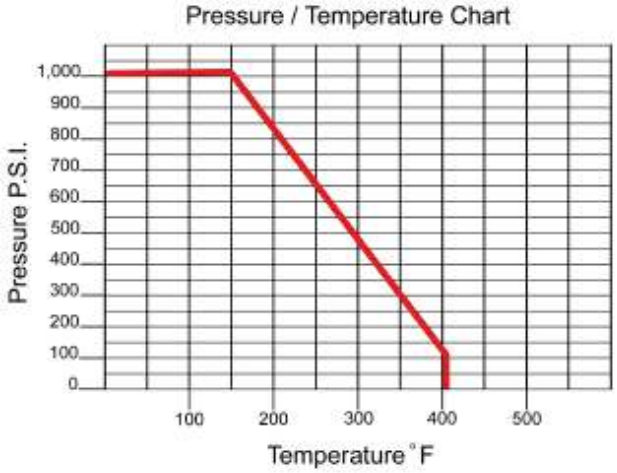

CONNECTION - STYLE:
Pipe / N.P.T.F. (Dryseal National Pipe Taper)
B.S.P.T. (British Standard Pipe Taper)
SW - Socket Weld
TSW - Tube Socket Weld

MATERIALS:
- BODY & CONNECTORS; 316 / 316L Stainless Steel ASTM A276
- BALL AND STEM; 316 Stainless Steel - ASTM A276
- FLANGES; CF8M Stainless Steel
- SEATS AND STEM SEAL; Glass Reinforced P.T.F.E. (Teflon®)
- BODY SEALS; Viton® (optional EPR, Silicone and Teflon® Encapsulated Viton® available)

Cv

Note: The values derived from the flow equation are for estimating purposes only. Product variances or systemic factors may alter actual performance.

Size	1/4	3/8	1/2	3/4	1	1-1/4	1-1/2	2
Cv Value- Standard	-	-	8	12	32	46	82	120
Cv Value- Full Port	8	8	12	32	46	82	120	-

Product Specifications

Pneumatic Actuators

TEMPERATURE: -20˚ F to 350˚ F

AIR SUPPLY: 60 - 125 psi air. Sufficient air delivery must be available at the actuator to ensure dependable operation. The following precautions should be observed: Air supply should be clean and free of moisture. When dirty or wet air is a problem; a filter / separator should be specified; these units are most effective when installed as closely as possible to the actuator. A filter, when used, should permit a minimum flow of 4 scfm at an upstream pressure of 60 psi. Eliminate severe restrictions to air flow (certain solenoid valves & fittings). The most restricted passage must have an area no smaller than .012 inches square, the area of 1/8" diameter orifice. If more than a single actuator is to be supplied by an individual pilot, the minimum passage requirement applies per actuator. All actuator models are permanently lubricated and are not recommended to be used with any other air supply lubricants.

TUBING: For short runs up to 5 feet 5/32" I.D. is suitable, 1/4" I.D. will serve up to 30 feet. For longer runs, use 3/8" I.D. or larger.

AIR CONNECTIONS: Female 1/8" NPT / NAMUR Interface

MATERIALS:

BODY - Aluminum with Teflon ® Impregnated Hard Anodized (PolyLube®) Surfaces
EXTERNAL HARDWARE - (Pinion Shaft, Driver, End Caps) 300 Series Stainless Steel
SPRING MODULES - Aluminum with Teflon® Impregnated Hard Anodized (PolyLube®) Surfaces, 300 Stainless Hardware
EXTERNAL TRIM - 300 Series Stainless Steel

Pneumatic Actuator Accessory - Integral Solenoid Valves

TEMPERATURE: -20˚ F to 350˚ F

AIR SUPPLY / TUBING: see Pneumatic Actuators Specifications

AIR CONNECTION: Female 1/4" NPT

OPERATING COIL: Operating coil technical data is dependent on the specific model selected, however, all standard coils as designated by the 'SC' code and conform to the following:

Wattage - 5 Watts
Class - F, continuous duty
Protection - IP65 (with connector) dusttight, water resistant, Connection: Mini-DIN Standard.

MATERIALS:

BODY - PTFE / Anodized Aluminum
SPOOL: 18-8 Stainless Steel
SEALS - Nitrile / Viton®
HARDWARE - 18-8 Stainless Steel
COIL / BODY - GF Nylon / GF Zytel

Product Specifications

Pneumatic Actuator Accessory - Limit Switch

TEMPERATURE: 10˚ F to 180˚ F

CONDUIT CONNECTION: 1/2” NPT

ELECTRICAL RATING: 10 amp. 250VAC maximum; 1/2 amp. 125VDC; 1/4 amp. 250VDC; 5 amp. 125VAC lamp load. Note: each pole must be the same polarity to utilize these ratings.

MICROSWITCHES: Mechanical S.P.D.T. (Single Pole Double Throw)

INTERNAL WIRING CONNECTIONS: Screw Clamp

NEMA STANDARDS: NEMA 1 (General Purpose); NEMA 4 (Watertight & Dusttight); NEMA 7 (Hazardous Locations, Class I Groups B, C, & D); NEMA 9 (Hazardous Locations, Class II, Groups E, F, & G); NEMA 12 (Oiltight and Driptight); and NEMA 13 (Oiltight and Dusttight).

UL® LISTINGS: Industrial Control Equipment for use in Hazardous Locations, Class I, Groups B,C, & D and Class II, Groups E, F, & G

MATERIALS:
BODY / COVER - Aluminum with Teflon® Impregnated Hard Anodized (PolyLube®) Surfaces
PROBES - 316 Stainless Steel
SEALS , COVER & PROBES - Buna N

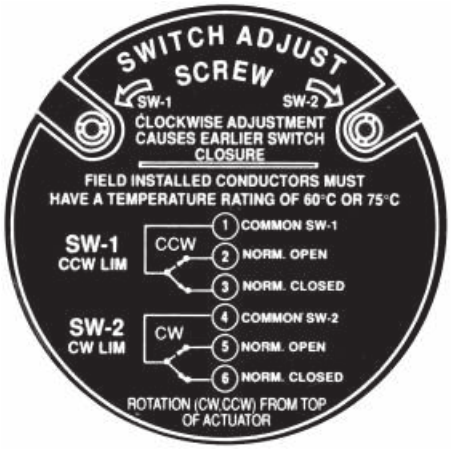

Electrical Schematic
(located in cover)

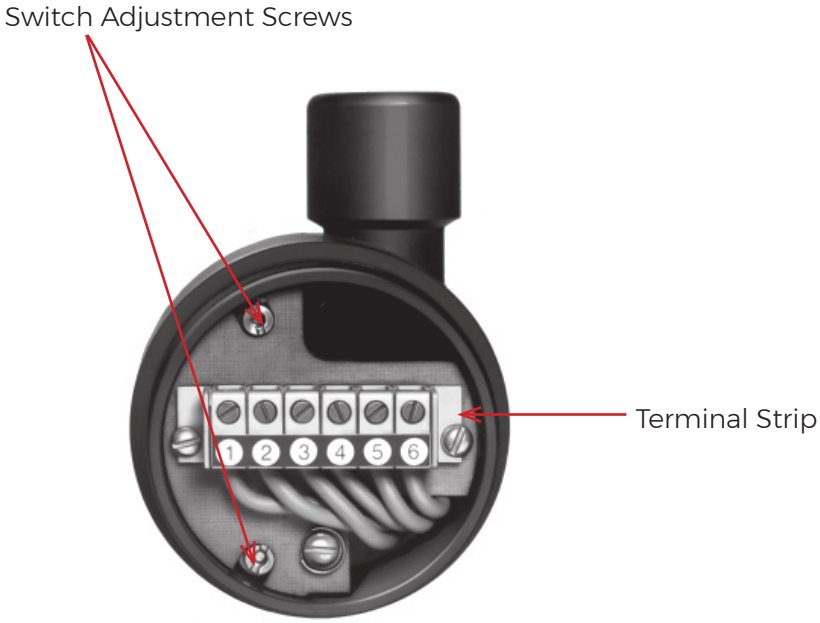

Product Specifications

Electric Actuators

TEMPERATURE: 40˚ F to 150˚ F

MOTOR: Reversing, Brushless, Capacitor-Run with Auto-Reset Thermal Overload Protection.

GEAR TRAIN: Permanently Lubricated, Maintenance Free

POWER: 120VAC 50/60 Hz Single Phase, 12&24VDC

OVERRIDE: Manual - Fold Out Lever Handle

PORTS: (2) 1/2" N.P.T. Conduit

CYCLE TIME: 6 Seconds

DUTY CYCLE /AMPS:

Model	DUTY CYCLE:	AMPS: (Full Load)
615-120AC	78%	0.3
630-120AC	78%	0.5
615-12VDC	100%	1.0
630-12VDC	75%	1.0
615-24VDC	100%	0.5
630-24VDC	75%	0.5

MATERIALS:
ENCLOSURE - Dupont® FR50 Cover, Teflon® Coated Cast Aluminum Base
SHAFT - 18-8 Stainless Steel
EXTERNAL TRIM - 300 Series Stainless Steel

120 AC Wiring Schematic

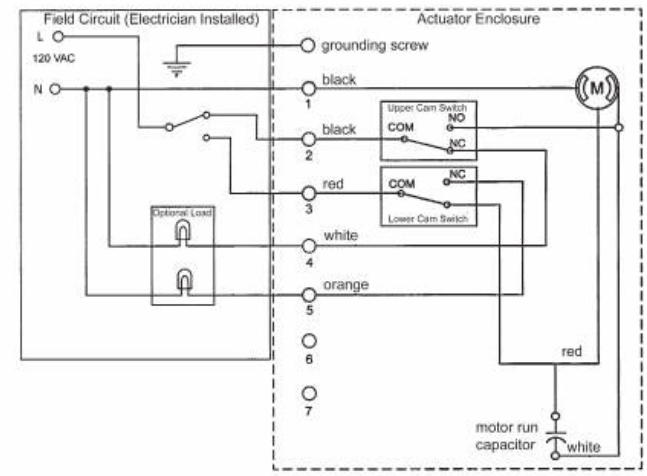

Neutral (N) to Terminal 1 and Line (L) to Terminal 2 Ball Valve / Actuator will Open. Neutral (N) to Terminal 1 and Line (L) to Terminal 3 Ball Valve / Actuator will Close.

Terminals 4 & 5 can be used for position feedback using motor voltage.

12 & 24 DC Wiring Schematic

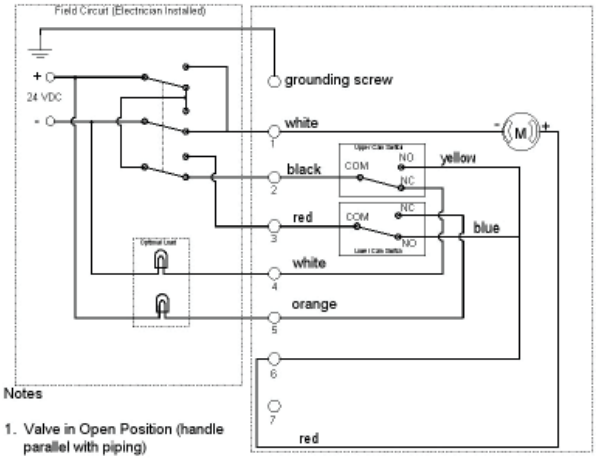

Negative (-) to Terminal 1 and Positive (+) to Terminal 2 Ball Valve / Actuator will Open. Positive (+) to Terminal 1 and Negative (-) to Terminal 3 Ball Valve / Actuator will Close.

Terminals 4 & 5 can be used for position feedback using motor voltage.

Product Dimensions

Pneumatically Actuated

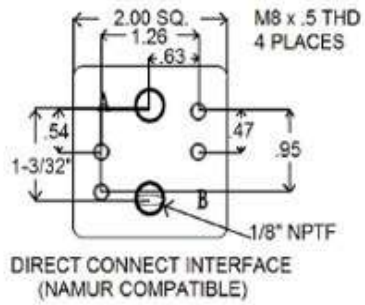

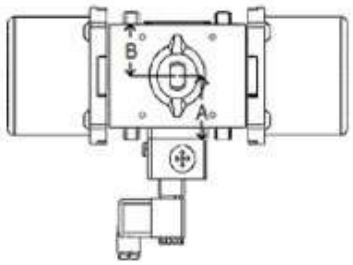

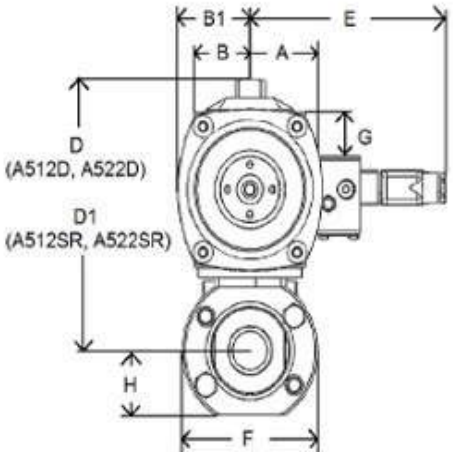

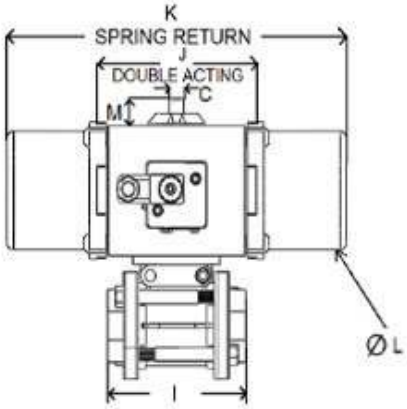

Port Construction Valve Size			Actuator Type Model		Dimensions - Inches														
Standard Port	Full Port	Port Size	Spring Return	Double Acting	A	B	B1	C	D	D1	E	F	G	H	I	J	K	L	M
1/2	1/4 & 3/8	0.5	A512SR	A512D	1.46	1.00	1.38	0.31	4.49	4.60	DA 5.22 SR 5.04	2.48	0.28	1.09	3.18	3.20	8.13	2.44	0.54
3/4	1/2	0.6							4.41	4.60		2.75		1.18	3.38				
1	3/4	0.8							4.66	4.84		3.25		1.43	3.74				
1-1/4	1	1.0	A522SR	A522D	1.87	1.55	2.02	0.50	6.79	6.79	DA 5.63 SR 5.45	3.75	1.07	1.60	4.57	4.99	11.22	3.50	0.82
1-1/2	1-1/4	1.2							7.12	7.12		4.50		1.92	4.65				
2	1-1/2	1.5							7.23	7.23		4.75		2.00	5.13				

With Limit Switch Option

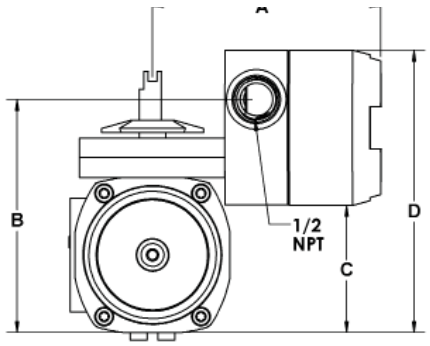

Actuator Model	A	B	C	D
A512D, A512SR	3.97	4.23	2.37	5.10
A522D, A522SR	4.24	5.91	4.05	8.78

Product Dimensions

Electrically Actuated

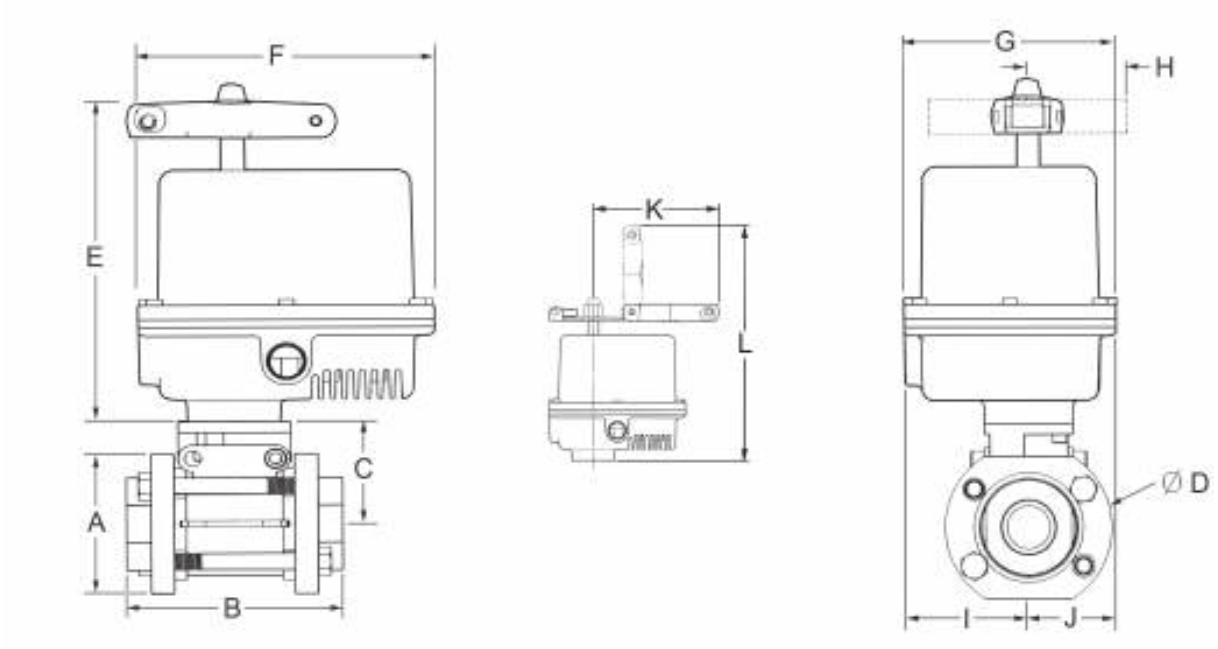

Standard Port	Full Port	Dimensions - Inches											
		A	B	C	D	E	F	G	H	I	J	K	L
1/2	1/4 & 3/8	2.18	3.18	1.59	2.50	6.74	6.25	4.75	2.23	2.78	1.97	5.77	10.35
3/4	1/2	2.34	3.38	1.67	2.75	6.74	6.25	4.75	2.23	'2.78	1.97	5.77	10.35
1	3/4	2.86	3.74	1.93	3.25	6.74	6.25	4.75	2.23	'2.78	1.97	5.77	10.35
1-1/4	1	3.20	4.56	2.33	3.75	7.24	6.25	4.75	2.23	'2.78	1.97	5.77	10.35
1-1/2	1-1/4	3.84	4.66	2.65	4.50	7.24	6.25	4.75	2.23	'2.78	1.97	5.77	10.35
2	1-1/2	4.00	5.12	2.77	4.75	7.24	6.25	4.75	2.23	'2.78	1.97	5.77	10.35

How To Configure Model Number

Manually & Pneumatically Actuated

Manually Actuated Valve

Select Valve Size & Connection Type and Product Attributes separated with dashes. Example 1SE F6-0.8-89-6-RTV-6-SL
Center Section Only. Example 0.8-89-6-RTV-6-SL / 0.8-89-6-RTV-6-Z Pipe Connector Only. Example 1SE F6-0.8-89-6

		Product Attributes						
Size	Connection Type	Flange & Pipe Connector Material	Port Size	Standard	Full	Center Section	Optional Special Features	Operator (Handle)
1/4	SE Female Screwed End N.P.T.	F6 316 / CF8M Stainless Steel	0.5	1/2	1/4 & 3/8	89-6-RTV-6 Stainless Steel, Seats & Stem Seals Glass Filled Reinforced P.T.F.E. (Teflon®), Body Seals Viton®	B Ball Cavity Internal Pressure Equalizing Vent 'B' Upstream Style	SL Stainless Lever
3/8	SW Socket Weld		0.6	3/4	1/2	89-6-RTT-6 Same as above but with P.T.F.E. (Teflon®) Encapsulated Viton® Body Seals	FCO NSF® / ANSI 169 Listed Certain Materials Available Consult Gemini Valve	Z Actuator Drive Key All Port Sizes Except 0.8
1/2	TSW Tube Socket Weld		0.8	1	3/4			Z1 Actuator Drive Key Port Size 0.8
3/4			1.0	1-1/4	1			
1			1.2	1-1/2	1-1/4			
1-1/4			1.5	2	1-1/2			
1-1/2								
2								

Pneumatically Actuated Valve

1. Take Manually Actuated Valve Model and omit Operator. Example 1SE F6-0.8-89-6-RTV-6
2a. Based upon the Valve Port Size Select Actuator Type and add to Actuated Valve Model separated by dashes.
Example 1SE F6-0.8-89-6-RTV-6-A512D
2b. Optional Accessory: Take the Pneumatically Actuated Valve Model and add GP NAMUR Integral Solenoid Valve and or Limit Switch separated by dashes. Examples: 1SE F6-0.8-89-6-RTV-6-A512D-4GP-SC07D-120VAC-DS
1SE F6-0.8-89-6-RTV-6-A512D-4GP-SC07D-120VAC-DS
1SE F6-0.8-89-6-RTV-6-A512D-4GP-SC07D-120VAC-DS-LS-1
1SE F6-0.8-89-6-RTV-6-A512D-LS-1

			Optional Actuator Accessory						
Valve Port Size	Actuator Type		GP Model NAMUR Integral Solenoid Valve						Limit Switch
	Double Acting	Spring Return	Type	Coil Style	Voltage Code	Connection Type	Voltage	Electrical Connector	
0.5 0.6 0.8	A512D	A512SR	4GP (use with Double-Acting) 3GP (use with Spring-Return)	SC Standard	07 120VAC	D Mini DIN	VAC	DS DIN X Strain	LS-1
				MR Manual Override	03 24VDC	L* Wire Leads	VDC	DC DIN X Conduit; 1/2"	
1.0 1.2 1.5	A522D	A522SR		HL* Hazardous Locations	02 12VDC			DA DIN X Field Bus M12	
					06 24VAC			DM15 DIN X Molded 15' Lead	
* HL Coil Style Only Offered in 120VAC Conduit Hub with 24" Leads					08 240VAC			C24* Conduit 24" Leads	

How To Configure Model Number

Electrically Actuated

1. Take Manually Actuated Valve Model and omit Operator.
   Example 1SE F6-0.8-89-6-RTV-6

2a. Based upon the Valve Port Size Select Actuator Model and Voltage and add to Manually Actuated Valve Model separated by dashes.
   Example 1SE F6-0.8-89-6-RTV-6-615-120AC

2b. Optional Extra Set of Limit Switches. Take the Electrically Actuated Valve Model and add LS separated with a dash.
   Example 1SE F6-0.8-89-6-RTV-6-615-120AC-LS

Valve Port Size	Actuator Model	Voltage
0.5 0.6 0.8	615	120AC
		24DC
1.0 1.2 1.5	630	12DC

Optional Extra Set Of Limit Switches
LS

Sample Request

OEMs (Original Equipment Manufacturers)

Gemini Valve provides no cost / obligation samples to OEMs who utilize our product(s) as in integral part of the products they manufacture. To obtain a product sample we simply want to learn the details of your intended application to ensure we are offering the best Gemini Valve solution for your specific application requirements. To obtain samples please call 603 244-7931 or email service@geminivalve.com your application parameters along with the model your interested in and we will respond promptly.

Plant Engineers, Maintenance Managers and Personnel

Gemini Valve provides samples at little or no cost to Plant Engineers, Maintenance Managers and Personnel who have ongoing or project requirements to enable testing and evaluation of our products. To obtain a product sample we simply want to learn the details of your intended application to ensure we are offering the best Gemini Valve solution for your specific application requirements. To obtain samples please call 603 244-7931 or email service@geminivalve.com your application parameters along with the model your interested in and we will respond promptly.