Compression End Series

Pneumatically, Electrically, and Manually Actuated Ball Valves

Alternative to high-pressure instrumentation models

Highlights

- 100% Bubble-Tight Tested
- Proven Twin Ferrule Design Ensures Positive Two-Point Sealing
- Assembled Clean & Without Lubricants
- Long-Lasting, Maintenance-Free
- Compact, Durable, Barstock Construction

Performance Engineered Automated Ball Valves

Designed and Tested, Manufactured and Assembled, Supplied and Supported, Direct from our USA Headquarters

Table of Contents

Compression End Series SL04-1805

Product Information

1. Ball Valves
2. Pneumatic Actuators and Accessories
3. Electric Actuators

Product Specifications

4. Ball Valves
5. Pneumatic Actuators and Integral NAMUR Solenoid Valves
6. Pneumatic Actuator Accessory - Limit Switch
7. Electric Actuators

Product Dimensions

8. Pneumatically Actuated Ball Valves
9. Electrically Actuated Ball Valves
10. How To Configure Model Number - Manually & Pneumatically Actuated
11. How To Configure Model Number - Electrically Actuated
12. Sample Request

2 Otter Court, Raymond, NH 03077 USA
T 603 244-7931 F 603 895-6785 E service@geminivalve.com
www.geminivalve.com

Product Information

Ball Valves

Gemini's Compression End Series offers an excellent alternative to high pressure instrumentation models for those applications where a pressure rating of 1,000 p.s.i. or less is required.

Valve body materials manufactured from durable barstock include; brass and 316 stainless steel in a size range of 1/4" - 1". Reinforced P.T.F.E. (Teflon®) Seats and Stem Seal are standard to meet the widest variety of application medias and temperature ranges.

The compression joint uses the proven twin ferrule design to ensure positive two point sealing between the tube and fitting.

Each valve is carefully cleaned, and assembled without lubricants and then thoroughly tested to ensure leak-tight performance. This process minimizes contamination of the media and helps to protect delicate system instrumentation.

As with all Gemini Valve products, the Compression End Series utilizes our superior self compensating stem seal design. This proven design automatically compensates for wear as well as thermal expansion and contraction resulting in a leaktight, maintenance free service life.

Gemini's Compression End Series ball valves feature machined seats and seals. This provides an optimum sealing surface which enables an excellent vacuum rating of 20 microns. If you have further questions regarding how are valves will perform in vacuum applications or any other application please reach out to us to consult with one of our valve specialists.

Manual handle options include;

Lever Handle

Considered the standard handle option. Manufactured from carbon steel with zinc plating for corrosion resistance. Also offered in 300 Series stainless steel. Handle is secured by Flex-Loc® brand locking nut which ensures handle will not loosen during service.

Latching-Lockable Lever Handle

The latching-lockable handle option provides a lever handle which prevents accidental opening or closing. A simple but positive thumb motion is required to pull the spring loader slider back until it clears the latch stop mounted on the valve, before the valve can be turned from either fully opened or closed position. A hole in the slider makes it possible to lock the handle in either the opened or closed position with a locking device such as a padlock. A padlock with any size shackle up to 5/16" diameter assures positive lock out.

Oval Handle

The Oval Handle option is ideal for applications where valve(s) are installed in close proximity to other devices or equipment and, or to minimize accidental opening or closing of the valve.

Wing Handle

Wing Handle option has the smallest handle indexing turning radius. Also ideal for linkage attachment for remote operation.

OEMs with a special need? Contact us with the details and if we're a good fit we can design, prototype, and manufacture a custom solution to best meet your application needs..

Product Information

Pneumatic Actuators & Accessories

Gemini's Compression End Series Pneumatic Actuators represent the combination of the latest in machining technology and our more than thirty five years experience in producing high performance pneumatic actuators.

Double-Acting

Spring-Return

Two pneumatic styles are offered: Double-acting, which uses air to move pistons in both directions and Spring-return, which uses air to move pistons in one direction and springs in the other. Double-acting is the most popular since it offers a compact size and longest service life at the lowest cost.

Pneumatic actuators feature a special rack and pinion design made possible through our unique manufacturing techniques. The results; a compact ball valve actuator which is efficient and trouble free. Index (or Cycle) time is approximately 1/2 to 1 second depending on model. Designed to operate using an air supply of 60 - 125 psi. The air can be delivered by direct mounting pilot valves such as the Gemini model GP having NAMUR interfaces or from remote pilot valves connected via means of 1/8" NPT female threaded orifices in the actuator face plates.

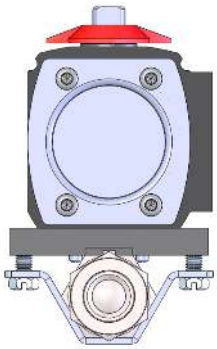

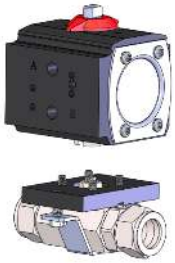

The mounting system precisely couples the actuator drive shaft to the stem. Additionally the valve stem nut is fixed within the actuator shaft. These features combined with a rigid mounting bracket, results in a pneumatically actuated ball valve which minimizes backlash, assures optimum stem seal life, and prevents any possibility of stem nut back off.

Gemini's Industrial GP Series Solenoid Valves utilize a flush mount NAMUR compatible interface to provide a space efficient design which quickly and easily mounts to Geminis' Industrial Series Pneumatic Actuators.

Constructed from corrosion resistant materials including a Teflon impregnated, hard coat anodized aluminum body, stainless steel spool, and Zytel operator body to ensure long, trouble free life in a variety of environments. A single air connection and DIN style electrical connection are all that is required to complete the automated ball valve package. The Mini-DIN style operating coil is available in a variety of popular voltages and can be adapted to conduit, strain relief, wire lead, or automotive style connections.

Limit switches are available for all models to remotely denote valve position or to connect with other devices. The limit switch utilizes two mechanical S.P.D.T. (Single-Pole, Double-Throw) microswitches which respond to actuators' fully open or fully closed position by mean of a cam fitted to the actuator top shaft. U.L.® Listed as Industrial Control Equipment for use in Hazardous Locations, Class I, Groups B, C, & D and Class II, Groups E, F, & G

Special brackets and shaft extensions are available for mounting the Gemini's Limit Switch, auxiliary equipment including positioners and signal transmitters, requiring NAMUR interface compatibility.

Product Information

Electric Actuators

Gemini's Compression End Series Electric Actuators have been designed for durability and longevity. Ideal for automation where no air supply is available for a pneumatically actuated valve, or if slower index time is needed. Example; high velocity / pressure, actuation can minimize or prevent 'water hammer,' which occurs if a valve closes quickly at the end of a pipeline system.

Actuators use voltage to power valve on / off. Once actuator reaches full open / close position, internal cam switches turn off motor. Wiring terminal block enables position feedback with motor voltage. An optional set of limit switches are available to connect to voltages other than motor (voltage) for position feedback or to power other devices. Available in 120VAC, 12 & 24VDC. Index (or Cycle) time is approximately 6 seconds. UL®508 Listed (AC Models Only).

The cast aluminum base dissipates internal heat though a special thermal conductor that pulls heat from the motor and allows for cooler operation during high duty cycle operation.

The permanently lubricated drive train and brushless motor is housed within a Viton® sealed enclosure rated to NEMA 4X to protect against moisture and contamination. As a final measure of electrical protection all AC motors utilize auto-resetting thermal overload circuits. Teflon® coated cast aluminum base, Dupont® FR50 Cover and Stainless Steel Trim for Maximum Corrosion Resistance.

The actuator features a simple push-button operated override with exclusive fold-out lever handle. The push-button manual override system allows the user to easily disengage the electric drive gear train for manual operation of the actuator / ball valve. All external power must be off prior to using the manual override feature. The actuator manual override handle can be used in the closed or open (lever extended) position to provide additional leverage.

To open the handle, pinch the Lever Release Buttons and pull up.

Lever Release Buttons

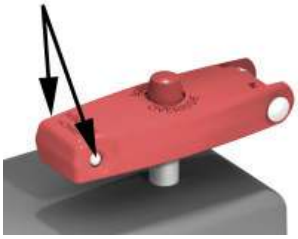

Press down the manual override button (atop the center) and turn the handle to manually open or close the actuated valve assembly.

Manual Override Button

To reengage the drive train, release the override button and turn the handle until the manual override button 'clicks' signaling the re-engagement of the drive train. The manual override lever handle can then be closed.

Product Specifications

Ball Valves

TEMPERATURE*: -50˚F to 450˚F

VALVE BODY PRESSURE RATING*: 1,000 P.S.I** C.W.P.***

MAXIMUM PRESSURE DIFFERENTIAL: 400 P.S.I.**

VACUUM: 20 Micron

SATURATED STEAM: 150 p.s.i.

*also see Pressure Temperature Chart
** p.s.i = Pounds Per Square Inch
*** C.W.P. = Cold Working Pressure to 150˚F

DIFFERENTIAL PRESSURE - TEMPERATURE CHART

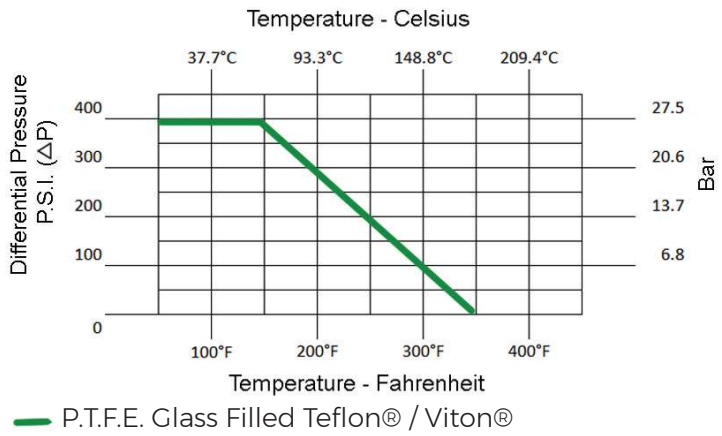

CONNECTION STYLE / SIZE RANGE:
Tube Compression 1/4" - 1"

MATERIALS:
BODY;
Brass - ASTM B-16
316 Stainless Steel ASTM A276,
BALL AND STEM; 316 Stainless Steel - ASTM A276
SEATS AND STEM SEAL; Glass Reinforced P.T.F.E. (Teflon ®)

Cv
Note: The values derived from the flow equation are for estimating purposes only. Product variances or systemic factors may alter actual performance.

Size	1/4	3/8	1/2	3/4	1
Cv	5.5	5.5	8	12	32

To Use the Pressure - Temperature Chart

Draw an imaginary line from your media Differential Pressure to your media Temperature to confirm it falls within the valve rating based upon the type of seal materials to be used.

To Calculate Pressure Differential

Compare the Upstream media pressure to the Downstream. The pressure differential should not exceed 400 P.S.I. See examples below;

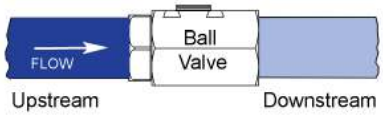

Examples:

Upstream Pressure of 1,000 P.S.I. less Downstream of 625 P.S.I. equals 375 P.S.I. which is below 400 P.S.I. differential i.e. OK

Upstream Pressure of 600 P.S.I. Less Downstream of 0 P.S.I. equals 600 P.S.I. which is above 400 P.S.I. differential - outside of ratings not recommended.

Product Specifications

Pneumatic Actuators

TEMPERATURE: -20˚ F to 350˚ F

CYCLE (INDEX) TIME: Approximately 1/2-1 Second (Load Dependent)

AIR SUPPLY: 60 - 125 psi air. Sufficient air delivery must be available at the actuator to ensure dependable operation. The following precautions should be observed: Air supply should be clean and free of moisture. When dirty or wet air is a problem; a filter / separator should be specified; these units are most effective when installed as close as possible to the actuator. A filter, when used, should permit a minimum flow of 4 scfm at an upstream pressure of 60 psi. Eliminate severe restrictions to air flow (certain solenoid valves & fittings). The most restricted passage must have an area no smaller than .012 inches square, the area of 1/8" diameter orifice. If more than a single actuator is to be supplied by an individual pilot, the minimum passage requirement applies per actuator. All actuator models are permanently lubricated and are not recommended to be used with any other air supply lubricants.

TUBING: For short runs up to 5 feet 5/32" I.D. is suitable, 1/4" I.D. will serve up to 30 feet. For longer runs, use 3/8" I.D. or larger.

AIR CONNECTIONS: Female 1/8" NPT / NAMUR Interface

MATERIALS:

BODY - Aluminum with Teflon ® Impregnated Hard Anodized (PolyLube®) Surfaces
EXTERNAL HARDWARE - (Pinion Shaft, Driver, End Caps) 300 Series Stainless Steel
SPRING MODULES - Aluminum with Teflon® Impregnated Hard Anodized (PolyLube®) Surfaces, 300 Stainless Hardware
EXTERNAL TRIM - 300 Series Stainless Steel

Pneumatic Actuator Accessory - Integral Solenoid Valves

TEMPERATURE: -20˚ F to 350˚ F

AIR SUPPLY / TUBING: see Pneumatic Actuators Specifications

AIR CONNECTION: Female 1/8" NPT for Model 4GP, 1/4" NPT for Model 3GP

OPERATING COIL: Operating coil technical data is dependent on the specific model selected, however, all standard coils as designated by the 'SC' code and conform to the following:

Wattage: 5 Watts
Class: F, continuous duty
Protection: IP65 (with connector) dusttight, water resistant, Connection: Mini-DIN Standard

MATERIALS:
BODY - PTFE / Anodized Aluminum
SPOOL - 18-8 Stainless Steel
SEALS - Nitrile / Viton®
HARDWARE - 18-8 Stainless Steel
COIL / BODY - GF Nylon / GF Zytel

Product Specifications

Pneumatic Actuator Accessory - Limit Switch

TEMPERATURE: 10˚ F to 180˚ F

CONDUIT CONNECTION: 1/2" NPT

ELECTRICAL RATING: 10 amp. 250VAC maximum; 1/2 amp. 125VDC; 1/4 amp. 250VDC; 5 amp. 125VAC lamp load. Note: each pole must be the same polarity to utilize these ratings.

MICROSWITCHES: Mechanical S.P.D.T. (Single Pole Double Throw)

INTERNAL WIRING CONNECTORS: Screw Clamp

NEMA STANDARDS: NEMA 1 (General Purpose); NEMA 4 (Watertight & Dusttight); NEMA 7 (Hazardous Locations, Class I Groups B, C, & D); NEMA 9 (Hazardous Locations, Class II, Groups E, F, & G); NEMA 12 (Oiltight and Driptight); and NEMA 13 (Oiltight and Dusttight).

UL® LISTINGS: Industrial Control Equipment for use in Hazardous Locations, Class I, Groups B,C, & D and Class II, Groups E, F, & G

MATERIALS:
Body / Cover - Aluminum with Teflon® Impregnated Hard Anodized (PolyLube®) Surfaces
Probes - 316 Stainless Steel
Cover Seal / Probes - Buna N

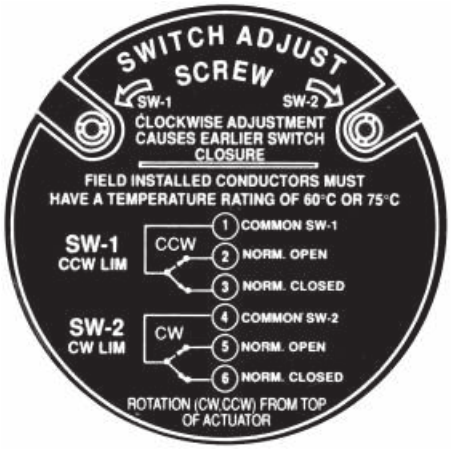

Electrical Schematic
(located in cover)

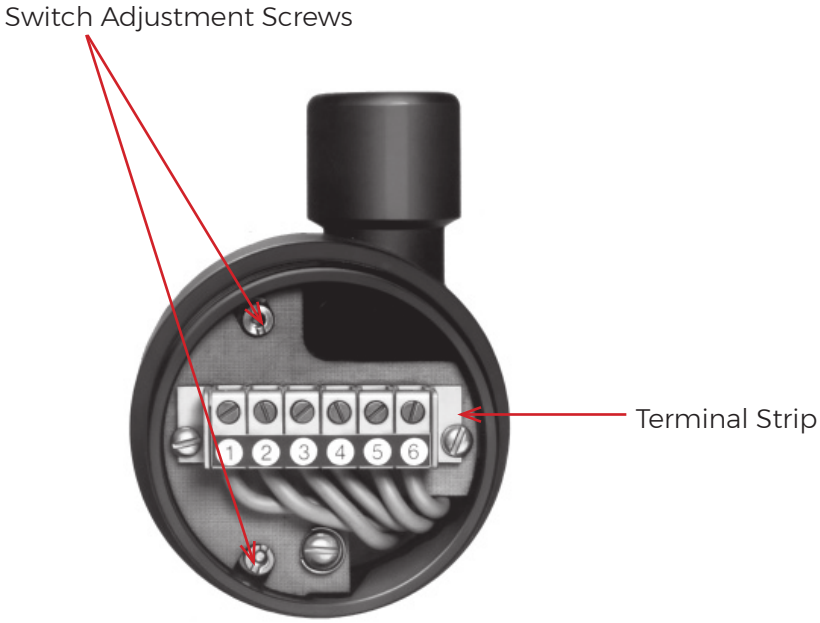

Product Specifications

Electric Actuators

TEMPERATURE: 40˚ F to 150˚ F

MOTOR: Reversing, Brushless, Capacitor-Run with Auto-Reset Thermal Overload Protection.

GEAR TRAIN: Permanently Lubricated, Maintenance Free

POWER: 120VAC 50/60 Hz Single Phase, 12&24VDC

OVERRIDE: Manual - Fold Out Lever Handle

PORTS: (2) 1/2" N.P.T. Conduit

CYCLE (INDEX) TIME: 6 Seconds

DUTY CYCLE /AMPS:

Model	DUTY CYCLE:	AMPS: (Full Load)
615-120AC	78%	0.5
630-120AC	78%	0.5
615-12VDC	100%	1.0
630-12VDC	75%	1.0
615-24VDC	100%	0.5
630-24VDC	75%	0.5

MATERIALS:
Enclosure - Dupont® FR50 Cover, Teflon® Coated Cast Aluminum Base
Shaft - 18-8 Stainless Steel
External Trim - 300 Series Stainless Steel

120 AC Wiring Schematic

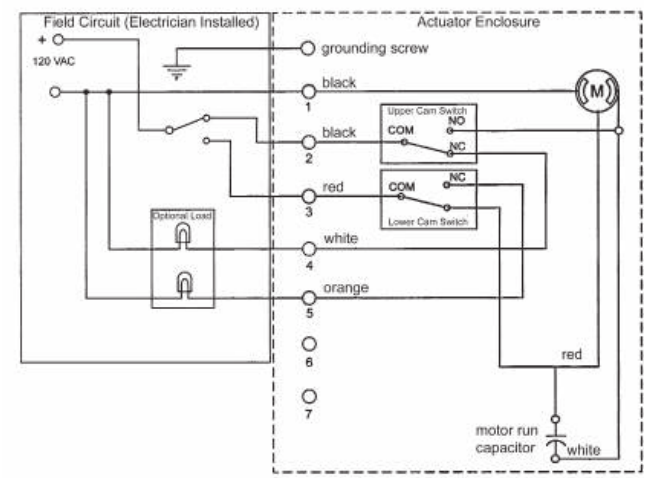

Neutral to Terminal 1 and Hot (+) to Terminal 2 Ball Valve / Actuator will Open.
Neutral to Terminal 1 and Hot (+) to Terminal 3 Ball Valve / Actuator will Close.

Terminals 4 & 5 can be used for position feedback using motor voltage.

12 & 24 DC Wiring Schematic

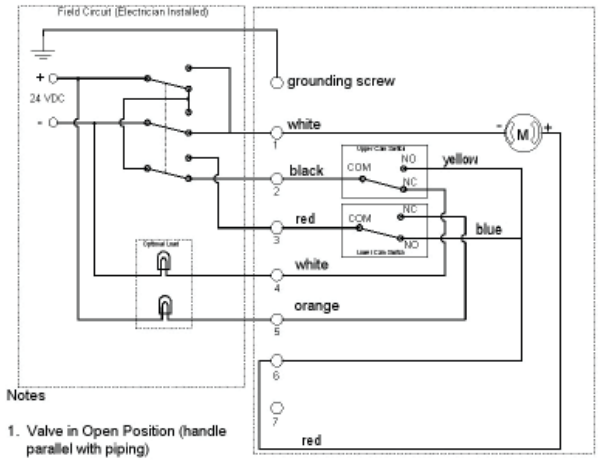

Negative (-) to Terminal 1 and Positive (+) to Terminal 2 Ball Valve / Actuator will Open. Positive (+) to Terminal 1 and Negative (-) to Terminal 3 Ball Valve / Actuator will Close.

Terminals 4 & 5 can be used for position feedback using motor voltage.

Product Dimensions

Pneumatically Actuated

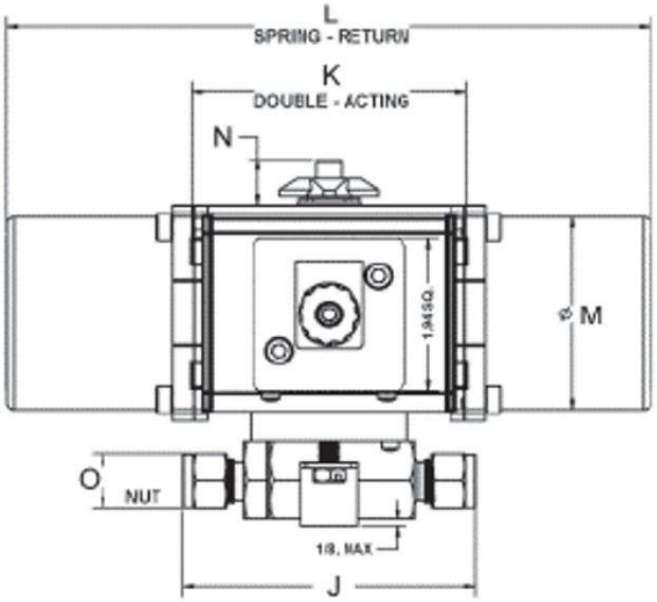

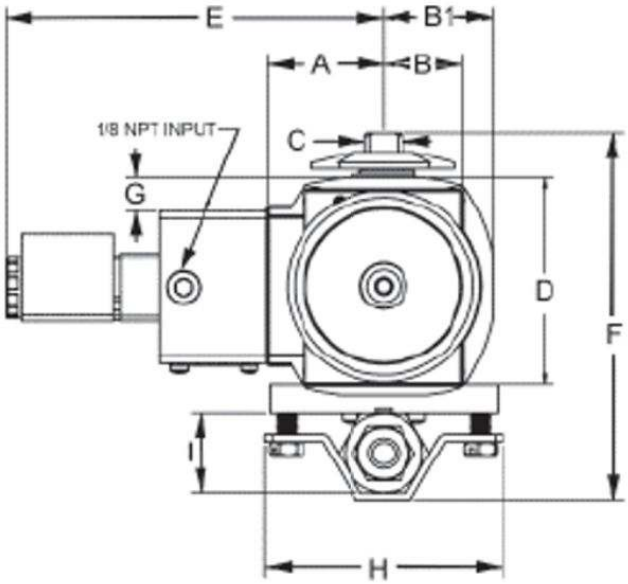

Spring Return - 'SR' Double Acting - 'D'																					
Approximate Dimensions, Inches																					
Tube Size		SR	D	SR	D		SR	D		SR	D	SR	D								
	A	B		B1		C	D		E	F		G		H	I	J	K	L	M	N	O
1/4										4.68	4.68				1.00	3.72					9/16
3/8										4.68	4.68				1.00	3.72					11/16
1/2	1.49	1.17	1.17	1.38	N/A	0.47	2.75	2.62	4.62	4.68	4.68	0.42	0.42	3.00	1.00	3.72	3.41	8.11	2.44	0.57	7/8
3/4										4.87	4.87				1.19	4.03					1-1/8
1										5.17	5.17				1.50	4.78					1-1/2

With Limit Switch Option

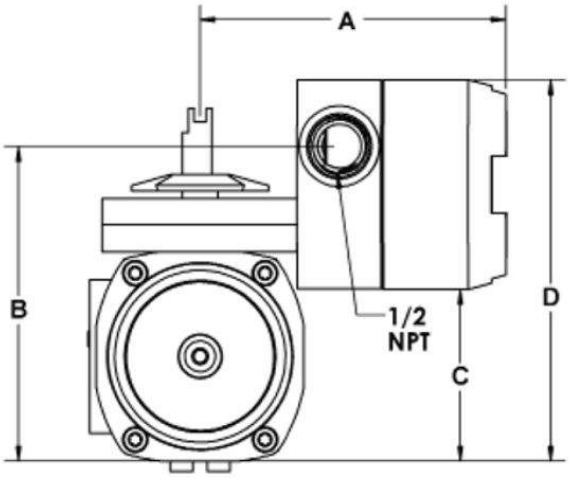

Actuator Model	A	B	C	D
A512D, A512SR	4.03	4.00	2.26	5.00
A522D, A522SR	4.30	5.29	3.42	6.16

Product Dimensions

Electrically Actuated

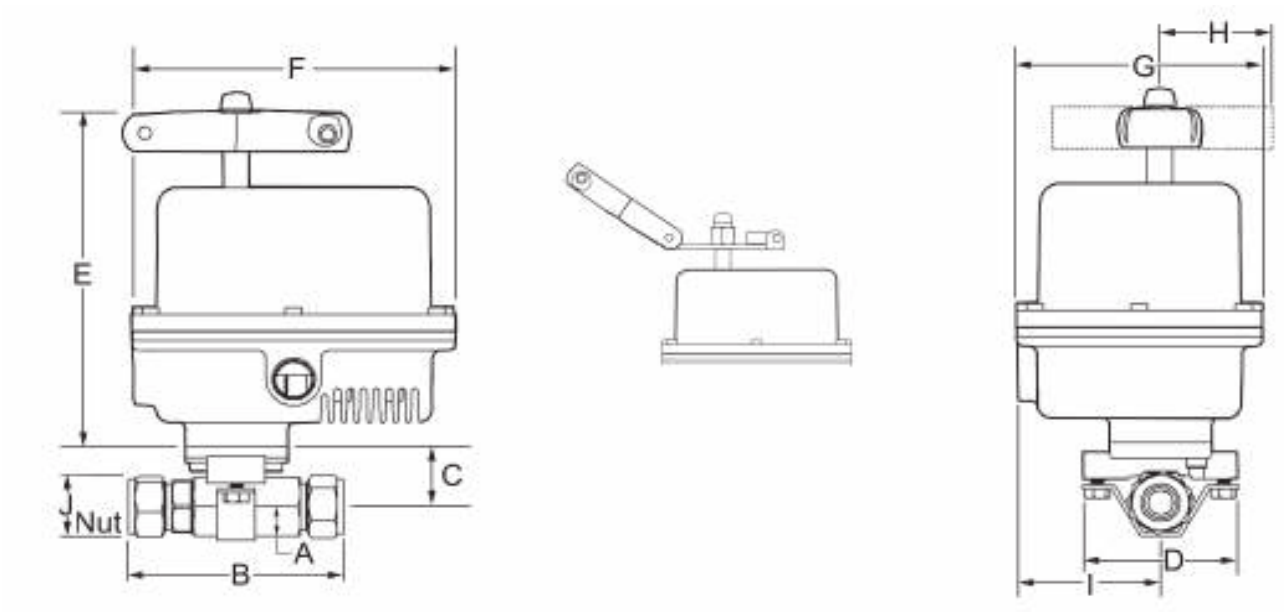

Tube Size	Actuator Model	Approximate Dimensions - Inches									
		A	B	C	D	E	F	G	H	I	J
1/4	615	.50	3.72	1.15	3.00	6.74	6.25	4.75	2.23	2.78	9/16
3/8		.50	3.70	1.15							11/16
1/2		.50	3.94	1.15							7/8
3/4		.59	4.17	1.24							1-1/8
1		.75	4.92	1.40							1-1/2

How To Configure Model Number

Manually & Pneumatically Actuated

Manually Actuated Valve

Select Valve Size and Product Attributes separated with dashes. Example 1/2TC 0.4-82-6-RT-6-L

	Product Attributes		
Size	Material	Optional Special Features	Operator Handle Type
1/4TC 0.4	82-1-RT-6 Brass Body, 316 Stainless Steel Ball & Stem P.T.F.E. (Glass Filled Reinforced Teflon®) Seals	B Internal Pressure Equalizing Vent - 'B' Style Upstream	L Lever
3/8TC 0.4			SL Stainless Steel Lever
	82-6-RT-6 316 Stainless Steel Body, Ball & Stem P.T.F.E. (Glass Filled Reinforced Teflon®) Seals	FC0 NSF® / ANSI 169 Listed Certain Materials Available Consult Gemini Valve	
1/2TC 0.4			LL Latching Lockable
3/4TC 0.5			R Oval
1TC 0.6			W Wing
			Z Actuator Drive Key

Pneumatically Actuated Valve

1. Take Manually Actuated Valve Model and omit Operator / Handle Type. Example 1/2TC 0.4-82-6-RT-6
2. Select Actuator Type and add to Manually Actuated Valve Model separated by dashes.
   Example 1/2TC 0.4-82-6-RT-6-A512D
3. Optional Accessory: Take the Pneumatically Actuated Valve Model and add GP NAMUR Integral Solenoid Valve and or Limit Switch separated by dashes.
   Examples: 1/2TC 0.4-82-6-RT-6-A512D-4GP-SC07D-120VAC-DS
   1/2TC 0.4-82-6-RT-6-A512D-4GP-SC07D-120VAC-DS-LS-1
   1/2TC 0.4-82-6-RT-6-A512D-LS-1

		Optional Actuator Accessory						
Actuator Type		GP Model NAMUR Integral Solenoid Valve						Limit Switch
Double Acting	Spring Return	Type	Coil Style	Voltage Code	Connection Type	Voltage	Electrical Connector	
A512D	A512SR	4GP (use with Double-Acting) 3GP (use with Spring-Return)	SC Standard	07 120VAC	D Mini DIN	VAC	DS DIN X Strain	LS-1
			MR Manual Override	03 24VDC	L* Wire Leads	VDC	DC DIN X Conduit; 1/2"	
			HL* Hazardous Locations	02 12VDC			DA DIN X Field Bus M12	
				06 24VAC			DM15 DIN X Molded 15' Lead	
				08 240VAC			C24* Conduit 24" Leads	

* HL Coil Style Only Offered in 120VAC Conduit Hub with 24" Leads

How To Configure Model Number

Electrically Actuated

1. Take Manually Actuated Valve Model and obmit Operator - Handle Type. Example: 1/2TC 0.4-82-6-RT-6
2. Select the Actuator Model and Voltage and add to Manually Actuated Valve Model separated by dashes.
   Example: 1/2TC 0.4-82-6-RT-6-615-120AC

Actuator Model	Voltage	Optional Extra Set of Limit Switches
615	120AC	LS
	24DC	
	12DC	

Sample Request

OEMs (Original Equipment Manufacturers)

Gemini Valve provides no cost / obligation samples to OEMs who utilize our product(s) as in integral part of the products they manufacture. To obtain a product sample we simply want to learn the details of your intended application to ensure we are offering the best Gemini Valve solution for your specific application requirements. To obtain samples please call 603 244-7931 or email service@geminivalve.com your application parameters along with the model your interested in and we will respond promptly.

Plant Engineers, Maintenance Managers and Personnel

Gemini Valve provides samples at little or no cost to Plant Engineers, Maintenance Managers and Personnel who have ongoing or project requirements to enable testing and evaluation of our products. To obtain a product sample we simply want to learn the details of your intended application to ensure we are offering the best Gemini Valve solution for your specific application requirements. To obtain samples please call 603 244-7931 or email service@geminivalve.com your application parameters along with the model your interested in and we will respond promptly.

All specifications herein are subject to change without notice or obligation. Products are marketed per Gemini Valve Standard Terms & Conditions.

Seller warrants its products for a period of one (1) year, to be manufactured in accordance with our written specifications and free from material defects in material and/or workmanship. Seller, at its option, will promptly repair or replace any products returned intact to the factory, transportation charges prepaid, which Seller determines to be defective in material and/or workmanship. The foregoing shall constitute the sole remedy for any breach of Seller's warranty. Care must be taken to assure that the internal media and external environment are compatible with the materials of the ball valve. For a complete copy of our Warranty please see our Standard Terms and Conditions at www.geminivalve.com

Customer Satisfaction Promise - If for any reason our product(s) or service do not meet / exceed your expectations please contact us for prompt support.